1 Product information C8 universal mount (2,25”)

Please read the information on the last page of this product manual!

If an unusual amount of flexibility is required for the assembly, we recommend the ball head device bracket. This device bracket consists of a socket arm with a wing screw and two end pieces that are available in a number of different designs. The end pieces can be combined with the socket arm in whatever way you need. However, on the Industrial PC side, a VESA-75 end piece is always required.

Fig. 1 Device bracket with the VESA-75 plate and universal mounting plate

This device bracket can be loosened and tightened with one large wing screw in order to adjust the position of the device for any given direction.

All components are made of salt water-resistant aluminum with matt-black powder coating (color corresponds to RAL 9017).

1.1 Socket arm for connecting two ball heads, 2.25”

Fig. 2 Socket arm 2,25”

This socket arm can be used to attach:

- VESA-75 plates
- Universal mounting plates
- Pipe clamps

noax part no.:	**11785**
Description:	Socket arm for connecting two ball heads, 2.25 “(in)
Length:	approx. 210 mm (total length)
Weight:	approx. 1.20 kg

1.2 VESA-75 plate with ball head, 2.25”

Fig. 3 VESA-75 plate 2,25“

Fig. 4 Scale drawing (all measurements in mm)

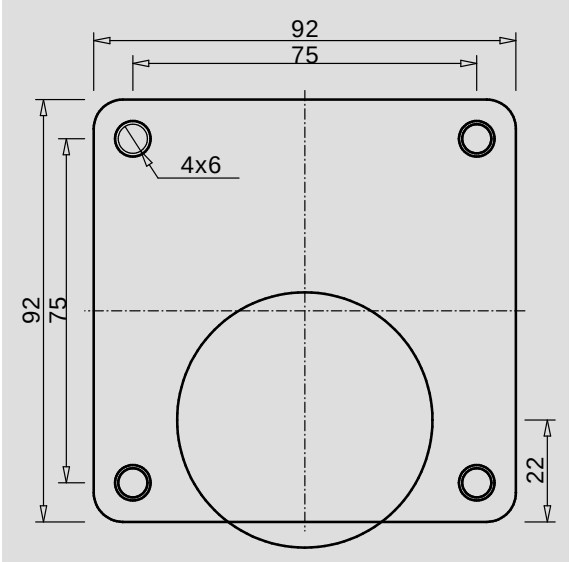

noax part no.:	**11786**
Description:	VESA-75 plate with ball head, 2.25” (in)
Height:	approx. 89 mm (mounting surface to top edge of ball)
Weight:	approx. 0.30 kg

1.3 Pipe clamp with ball head 2.25”

Fig. 5 Pipe clamp 2,25”

Fig. 6 Scale drawing (all measurements in mm)

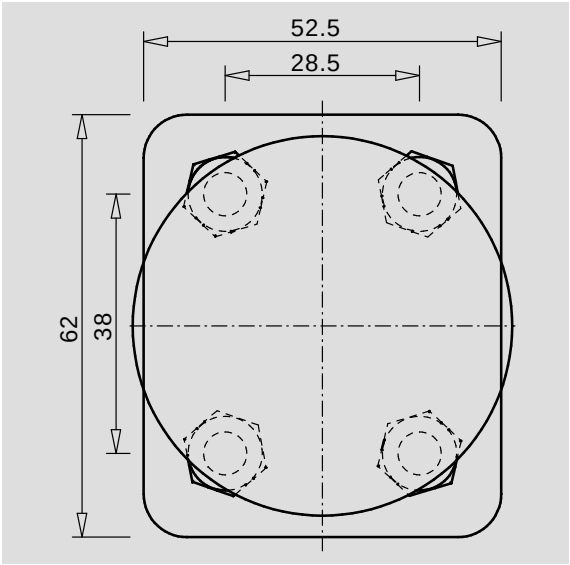

noax part no.:	**11752**
Description:	Pipe clamp with ball head 2.25” (in)
Pipe diameter:	19 - 32 mm (0.75 - 1.25” in)
Height:	approx. 105 mm (pipe surface to top edge of ball)
Weight:	approx. 0.40 kg

1.4 Universal mounting plate with ball head 2.25”

Fig. 7 Universal mounting plate 2.25”

noax part no.:	**11784**
Description:	Universal mounting plate with ball head 2.25” (in)
Height:	approx. 95 mm (mounting surface to top edge of ball)
Weight:	approx. 0.55 kg

Fig. 8 Scale drawing, universal mounting plate, 2.25” (all measurements in mm)

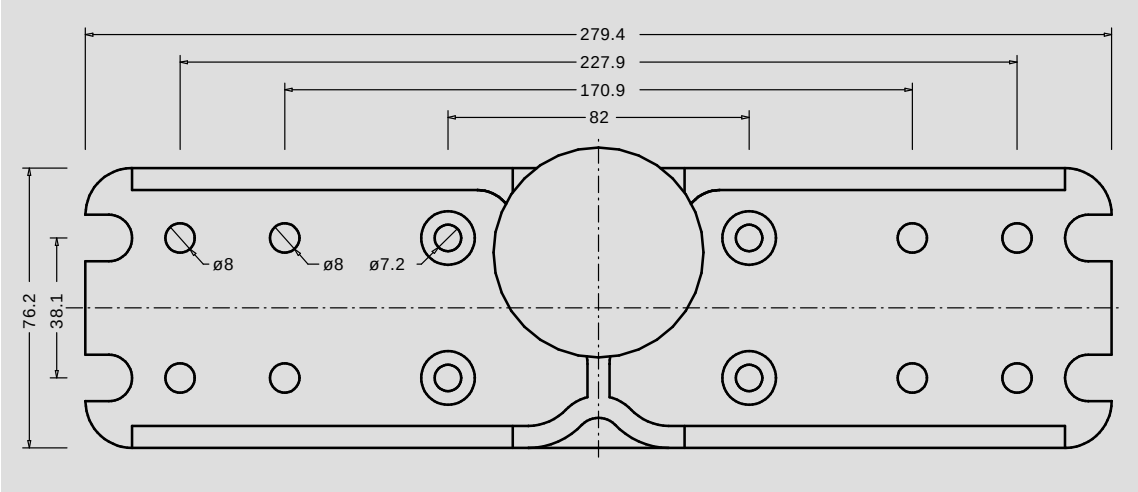

1.5 Installation notes

- ▶ Mount the VESA75-plate with the ball head to the Industrial PC.
- ▶ Mount a VESA75-plate, universal mounting plate or pipe clamp to the planned location.
- ▶ Open the two ends of the socket arm by turning the wing screw counter–clockwise (approx. 1 cm gap between the clamp sides).
- ▶ Press one of the open ends of the socket arm together like a clothes pin and fit the opposite end around one of the spherical heads (on the Industrial PC or a fixed point).
- ▶ Place the other ball head inside the other end of the socket arm.
- ▶ Tighten both of the ball heads by turning the socket arm wing screw clockwise.

1.6 Important points

⚠ **BE CAREFUL of injury!**
When opening the clamp connections (turning the wing screw counterclockwise on the socket arm) you can quickly release heavy equipment. There is a danger that you crush body parts or damage machinery and surfaces.

BOTH ball heads are loosened AT THE SAME TIME when you loosen the wing screw; the mounted device and its weight will be released suddenly and completely.

Turn the wing screw carefully and slowly, and only when the mounted weight is supported – preferably by another person.

ⓘ Note: The system is not designed for constant adjustment.

⚠ **The device bracket with ball head does NOT protect against vibration for Industrial PCs !**
In order to mount the device on forklifts or similar vehicles you must **use additional accessories in order to protect against shock and vibration.**

ⓘ For more information regarding mounting, other device brackets or vibration absorbers please go to **www.noax.com**.

noax Technologies AG
Am Forst 6
85560 Ebersberg (Germany)
Tel. +49 (0) 8092 8536 0
Fax +49 (0) 8092 8536 55
Hotline: +49 (0) 8092 8536 33
hotline@noax.com

noax Technologies Corp.
10115 Kincey Avenue, Suite 142
Huntersville, NC 28078 (USA)
Phone +1 704 992 1606
Fax +1 704 992 1712
Hotline: +1 704 992 1606
hotline@noaxna.com